LUCKY LIGHT

GB-95-21-03 SERIES

Yoke Lead

LED Lamps (ϕ1.8mm)

DESCRIPTION:

The 95-21-03 series is subminiature LED Lamps with dome package and is widely used for application requiring higher luminous intensity within a narrow radiation pattern.

The semi-conductor materials used are:

GaP for (95-21HC-03/HD-03, 95-21GC-03/GD-03/VGC-03/VGD-03)

GaAlAs for (95-21HR3C-03/HR3D-03)

GaAsP/GaP for (95-21YC-03/YD-03/VYC-03/VYD-03, 95-21SC-03/SD-03)

PACKAGE DIMENSIONS

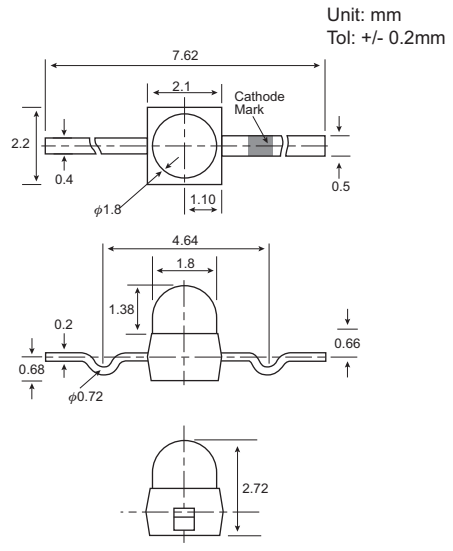

ABSOLUTE MAXIMUM RATINGS: (Ta=25°C)

Reverse Voltage	5 Volt
Reverse Current (Vr =5V)	100µA
Operating Temperature Range	-40°C To 85°C
Storage Temperature Range	-40°C To 100°C
Lead Soldering Temperature (1.6mm (1/16)From Body)	260°C For 5 Seconds

NOTES : 1. All dimensions are in millimeters.
2. Lead spacing is measured where the leads emerge from the package.
3. Protuded resin under flange is 1.5 mm (0.059") Max.

PART NO. SELECTION AND APPLICATION INFORMATION (RATINGS AT 25°C AMBIENT)

Part No.	Emitted Color	Lens Color	Peak Wavelength λp (nm)	Vf (v) Min	Vf (v) Max	Rec. If (mA).	Iv (mcd) Min	Iv (mcd) Typ.	View Angle $2\theta_{1/2}$(Deg)
GB-95-21HD-03	Red	Red Diffused	697	1.7	2.6	20	2.0	2.5	50
GB-95-21GD-03	Green	Green Diffused	565	1.7	2.6	20	3.0	6.5	50
GB-95-21YD-03	Yellow	Yellow Diffused	585	1.7	2.6	20	3.0	6.5	50
GB-95-21HR3D-03	Super Red	Red Diffused	660	1.7	2.6	20	55.0	100.0	50
GB-95-21VGD-03	Super Green	Green Diffused	565	1.7	2.6	20	10.0	16.0	50
GB-95-21VYD-03	Super Yellow	Yellow Diffused	585	1.7	2.6	20	7.0	11.0	50
GB-95-21HC-03	Red	Water Clear	697	1.7	2.6	20	3.0	6.0	25
GB-95-21GC-03	Green	Water Clear	565	1.7	2.6	20	11.0	19.5	25
GB-95-21YC-03	Yellow	Water Clear	585	1.7	2.6	20	10.0	16.0	25
GB-95-21HR3C-03	Super Red	Water Clear	660	1.7	2.6	20	110.0	170.0	25
GB-95-21VGC-03	Super Green	Water Clear	565	1.7	2.6	20	30.0	50.0	25
GB-95-21VYC-03	Super Yellow	Water Clear	585	1.7	2.6	20	18.0	30.0	25

TESTING CONDITION FOR EACH PARAMETER :

PARAMETER:	SYMBOL	UNIT	TEST CONDITION
REVERSE VOLTAGE	Vr	VOLT	Vr = 5.0 Volt
REVERSE CURRENT	Ir	µA	If = 20mA
FORWARD VOLTAGE	Vf	VOLT	If = 20mA
LUMINOUS INTENSITY	Iv	MCD	If = 20mA
VIEWING ANGLE	$2\theta_{1/2}$	DEGREE	
RECOMMENDED OPERATING CURRENT	If (Rec)	mA	

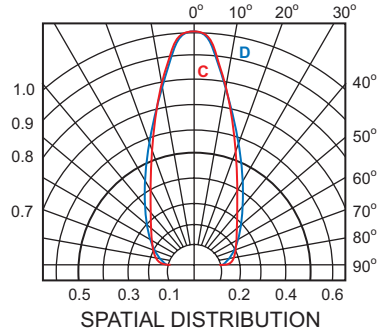

SPATIAL DISTRIBUTION