LUCKY LIGHT

GB-333/F SERIES
Round Type
With Stand-offs
LED Lamps (5mm)

DESCRIPTION:

The 333/F series is widely used in general purpose indicator applications.
It is in popular 5mm diameter package and with stand-offs.
The semi-conductor materials used are:
GaP for (333HD/F, HT/F, GC/F, GD/F, GT/F)
GaAsP/GaP for (333RHC/F, RHD/F, RHT/F, YC/F, YD/F, YT/F and 333SD/F)

PACKAGE DIMENSIONS

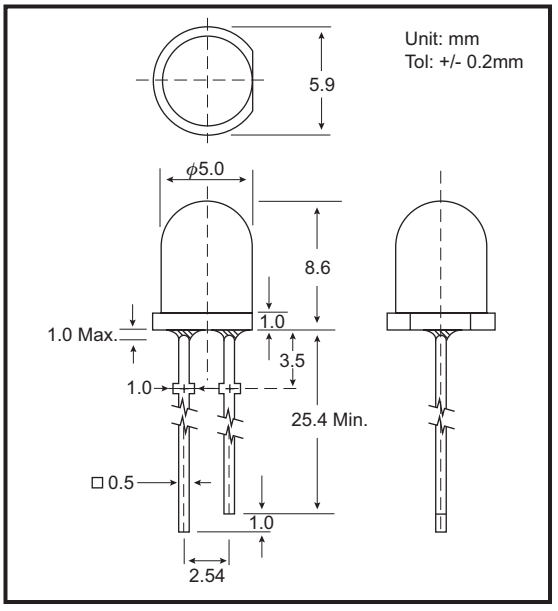

ABSOLUTE MAXIMUM RATINGS: (Ta=25°C)

Reverse Voltage	5 Volt
Reverse Current (Vr =5V)	100µA
Operating Temperature Range	-40°C To 85°C
Storage Temperature Range	-40°C To 100°C
Lead Soldering Temperature (1.6mm (1/16)From Body)	260°C For 5 Seconds

NOTES : 1. All dimensions are in millimeters.
2. Lead spacing is measured where the leads emerge from the package.
3. Protuded resin under flange is 1.5 mm (0.059") Max.

PART NO. SELECTION AND APPLICATION INFORMATION (RATINGS AT 25°C AMBIENT)

Part No.	Emitted Color	Lens Color	Peak Wavelength λp (nm)	Vf (v) Min	Vf (v) Max	Rec. If (mA).	Iv (mcd) Min	Iv (mcd) Typ.	View Angle $2\theta_{1/2}$(Deg)
GB-333HD/F	Bright Red	Red Diffused	697	1.7	2.6	5-10	1.1	3.7	36
GB-333RHD/F	Bright Red	Red Diffused	660	1.7	2.6	10-20	5.6	19.0	36
GB-333GD/F	Green	Green Diffused	565	1.7	2.6	10-20	5.6	19.0	36
GB-333YD/F	Yellow	Yellow Diffused	585	1.7	2.6	10-20	5.6	19.0	36
GB-333SD/F	Orange	Orange Diffused	610	1.7	2.6	10-20	8.7	29.0	36
GB-333HT/F	Bright Red	Red Trans.	697	1.7	2.6	5-10	5.6	19.0	16
GB-333RHT/F	Bright Red	Red Trans.	660	1.7	2.6	10-20	29.0	90.0	16
GB-333GT/F	Green	Green Trans.	565	1.7	2.6	10-20	19.0	60.0	16
GB-333YT/F	Yellow	Yellow Trans.	585	1.7	2.6	10-20	29.0	90.0	16
GB-333RHC/F	Bright Red	Water Clear	660	1.7	2.6	10-20	29.0	90.0	16
GB-333GC/F	Green	Water Clear	565	1.7	2.6	10-20	19.0	60.0	16
GB-333YC/F	Yellow	Water Clear	585	1.7	2.6	10-20	29.0	90.0	16

TESTING CONDITION FOR EACH PARAMETER :

PARAMETER:	SYMBOL	UNIT	TEST CONDITION
REVERSE VOLTAGE	Vr	VOLT	Vr = 5.0 Volt
REVERSE CURRENT	Ir	µA	If = 20mA
FORWARD VOLTAGE	Vf	VOLT	If = 20mA
LUMINOUS INTENSITY	Iv	MCD	If = 20mA
VIEWING ANGLE	$2\theta_{1/2}$	DEGREE	
RECOMMENDED OPERATING CURRENT	If (Rec)	mA	

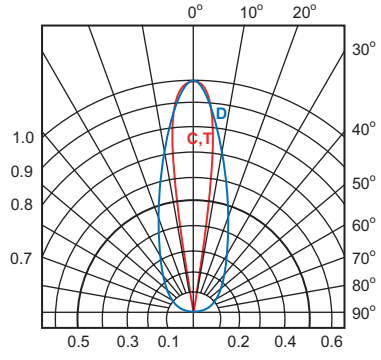

SPATIAL DISTRIBUTION